N42 LIPF plumbing layout

all lines 3/8" O.D. PFA Teflon except as noted
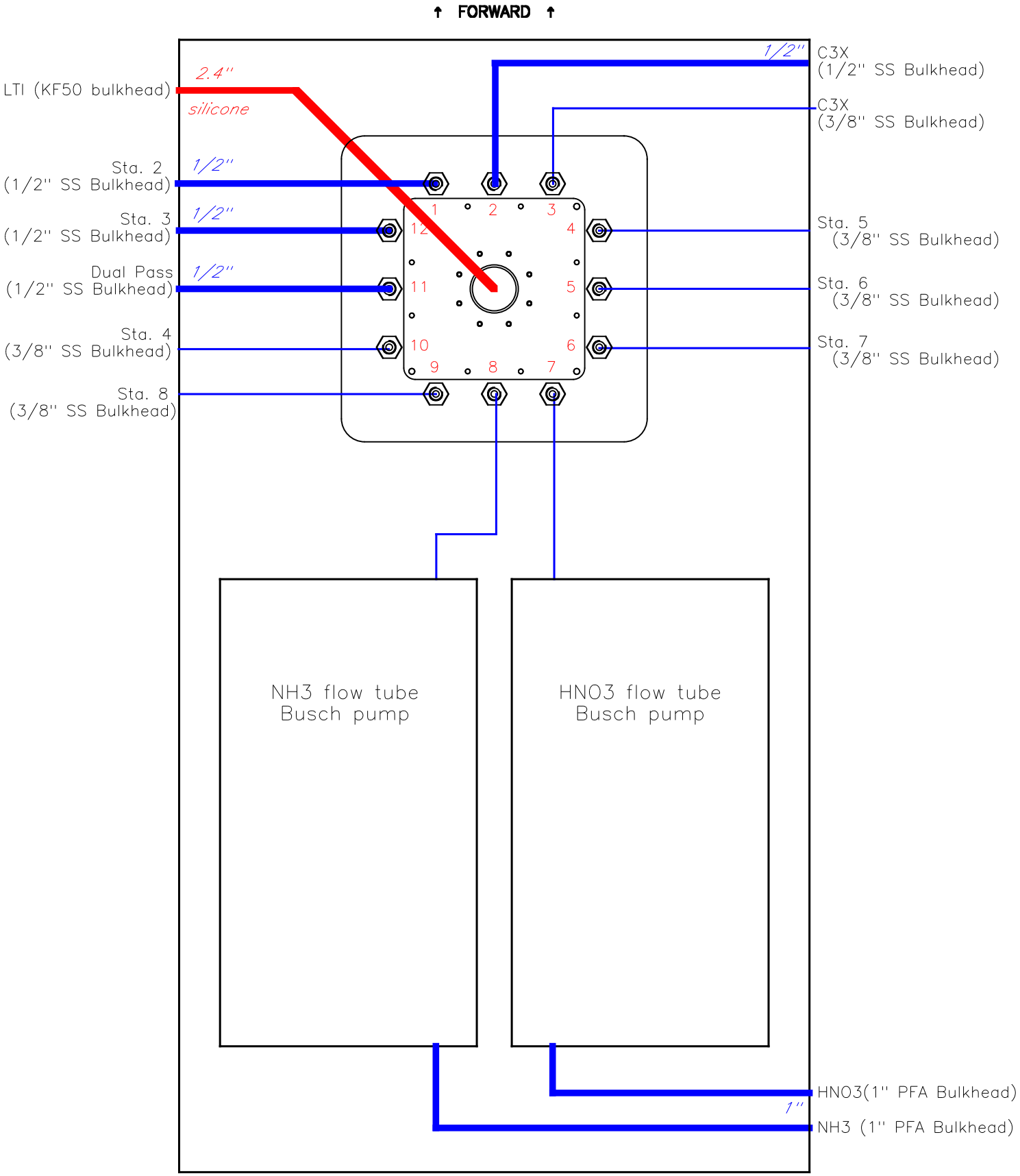
version 1, 2/06/2013